MODEL : MODERNA SINGLE BED (910 x 1900MM)
ASSEMBLY INSTRUCTIONS

PART LIST		
ITEM	DESCRIPTION	QTY.
A	HB. & FB. TOP PANEL	x 2
B	HB. MID. & BOTTOM PANEL	x 2
C	FB. BOTTOM PANEL	x 1
D	HEAD POST	x 2
E	FOOT POST	x 2
F	BED SLAT (BEND)	x 10
G	BED SLAT (FLAT)	x 2

ITEM	DESCRIPTION	QTY.
H	SIDE RAIL	x 2

ASSEMBLY TIPS

Remove hardware from box and sort by size to check that all hardware and parts are present before assembling. Follow instructions below in the proper sequence to ensure fast, easy and correct assembly.

⚠ **WARNING !!**

DO NOT FULLY TIGHTEN ALL BOLTS UNTIL ALL PARTS ARE IN PLACE. FAILURE TO FOLLOW THIS INSTRUCTION MAY CAUSE THE BOLTS TO BE MISALIGNED DURING THE ASSEMBLY.

HARDWARE LIST		
ITEM	DESCRIPTION	QTY.
1.	JCBC M6 x 60mm	x 10
2.	JCBC M6 x 90mm	x 8
3.	M6 x 13mm BARREL NUT	x 8
4.	WOOD DOWEL M10 x 40mm	x 14
5.	M4 ALLEN KEY	x 1
6.	STOPPER CAP	x 20
7.	WOODEN BUTTON 14.5mm	x 18
8.	JCBC M6 x 35mm	x 4
9.	WOOD DOWEL M8 x 30mm	x 4

NOTE : DURING ASSEMBLY , DO NOT TIGHTEN ANY SCREWS UNTIL THE COMPLETE UNIT HAS BEEN ASSEMBLED.

Thank you for purchasing this quality product. Be sure to check all packed material carefully for small parts which may have come loose inside the carton during shipment. Place all parts on a clean , smooth surface such as a rug or carpet to avoid scratching the parts. Be sure you have all the parts and hardware before you begin assembly.
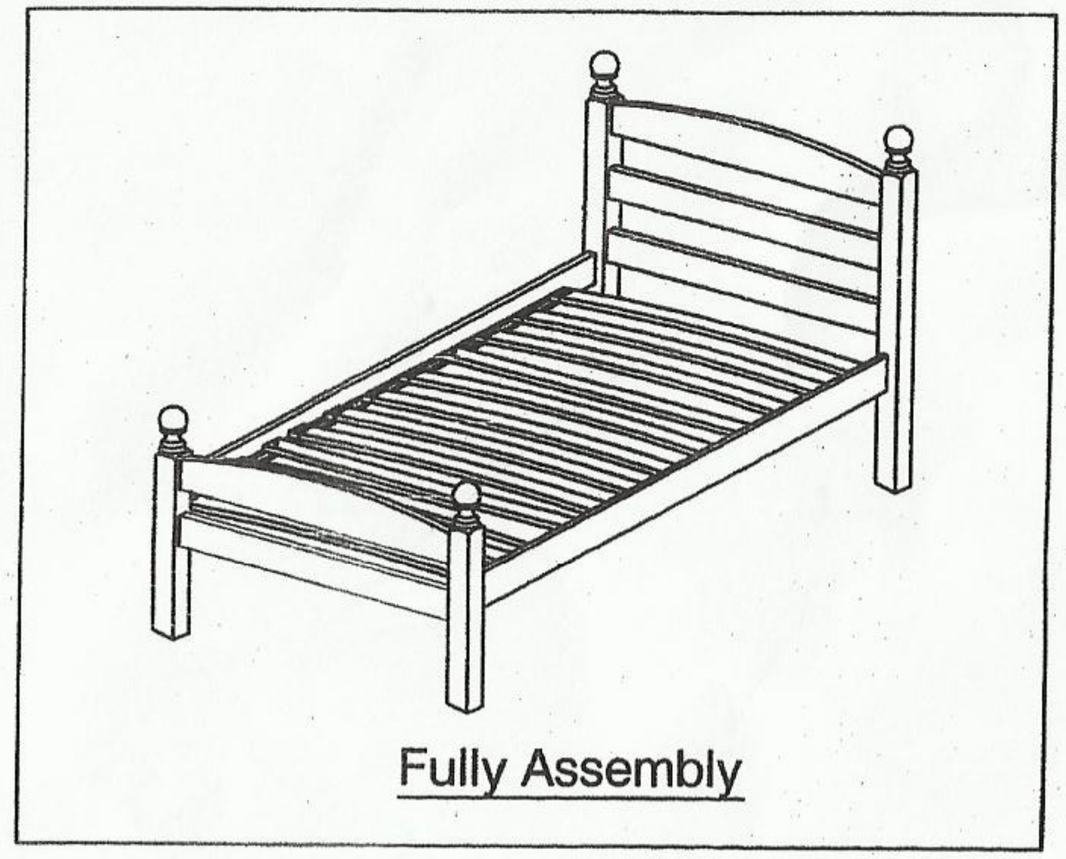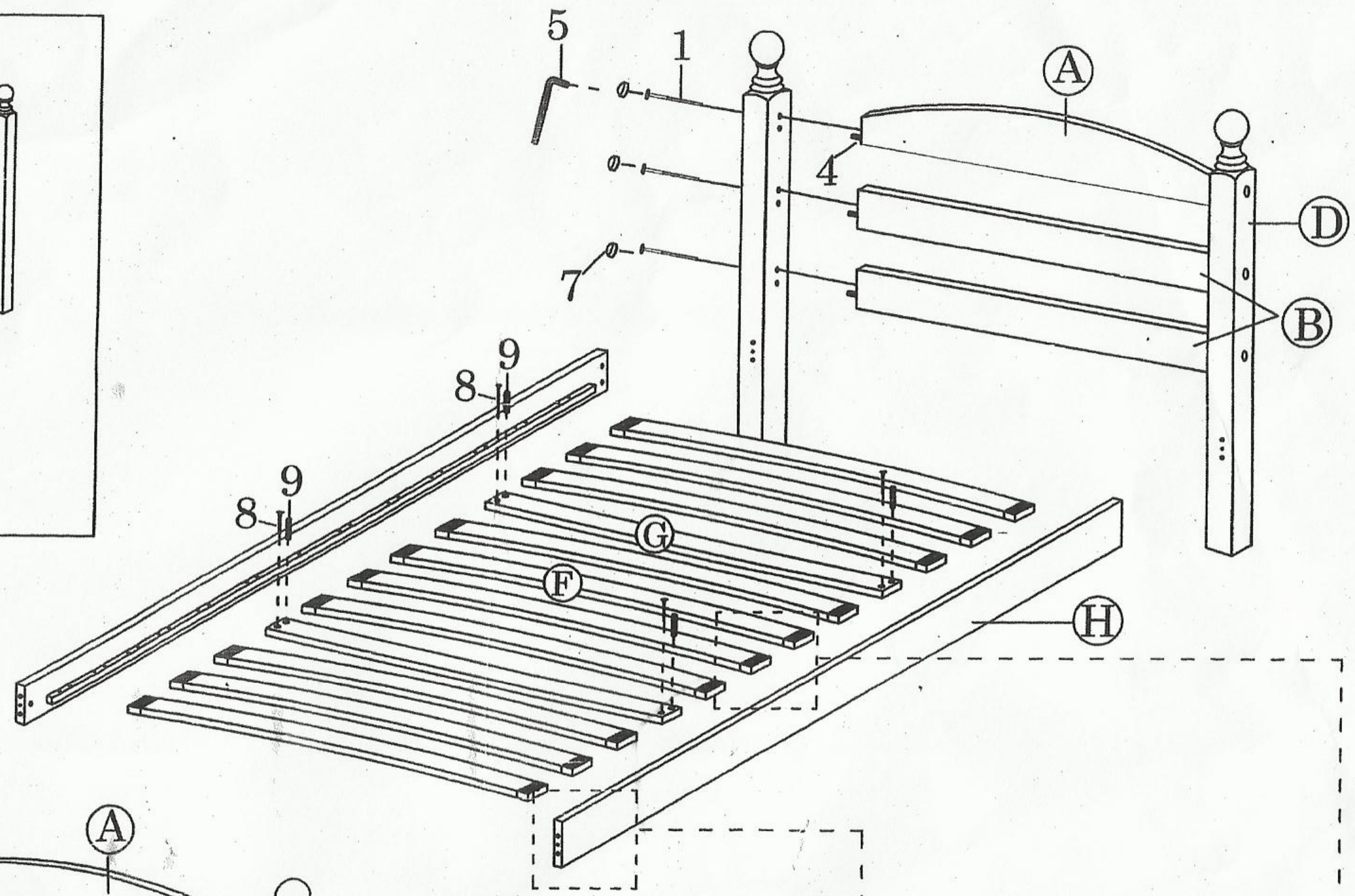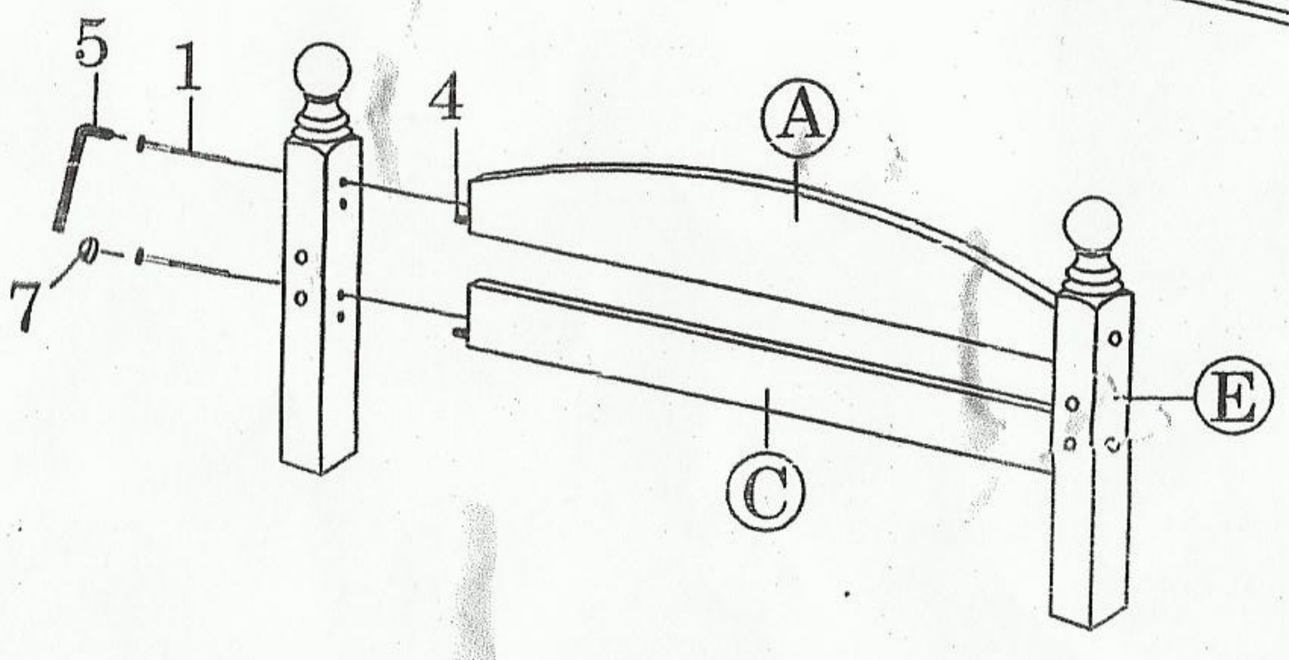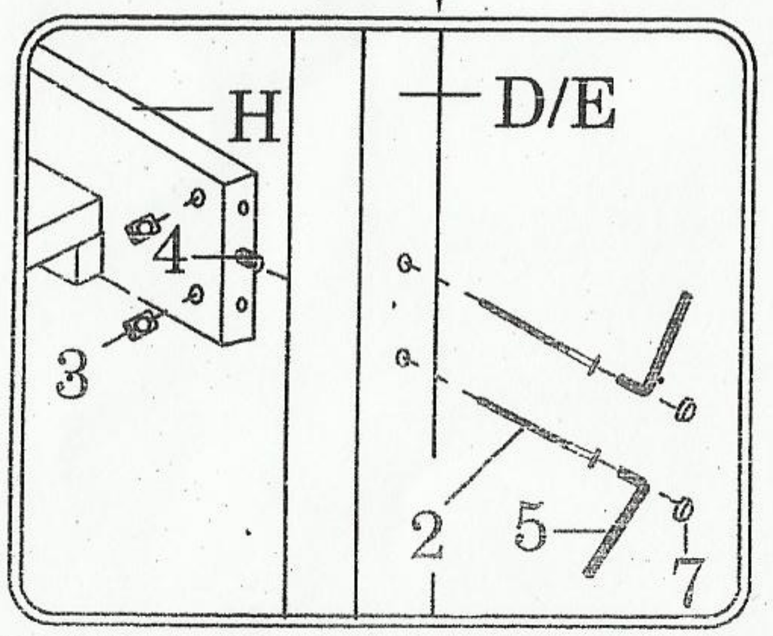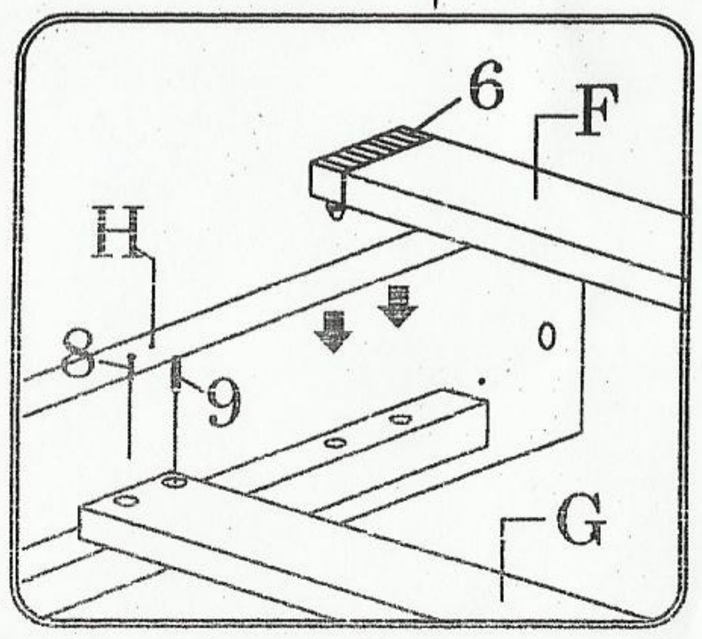
MODEL : MODERNA SINGLE BED (910 x 1900MM)
ASSEMBLY INSTRUCTIONS